Hydraulic Jacking Device

1.0 Components

CRATE	ITEM	QTY
Jacking Device Crate #1	Jacking Bar	2
73" L x 21" W x 19" H	Cylinder: 5 inch Bore x 12 inch Stroke x 2 inch Rod	2
(900 lbs)	Cylinder Mount	2
	Push-Pull Bar	2
	Clevis Pin: 1 ¾ inch Diameter	2
	Set Screw: 1 inch Diameter x 2 ½ inch Length	10[1]
	Jam Nut: 1 inch Diameter	10[1]
	Bottoming Tap: 1 inch Diameter x 8 UNC Thread	1
	Short Arm Hex Key Allen Wrench: 9/16 inch	1
	Weight (Crate and Contents)	***900 lbs***
Hyd Power Unit Crate #2	ENERPAC® Hydraulic Power Unit	1
32" L x 24" W x 29" H	Hydraulic Hose w/ ENERPAC® hydraulic quick couplers	2
(300 lbs)	***Weight (Crate and Contents)***	***300 lbs***
Crates 1 & 2	***Combined Weight (Crates and Contents)***	***1,200 lbs***

[1] 8 required (4 per side) to fasten jacking device to pole sections. 2 extra included.

2.0 Schematic Drawings

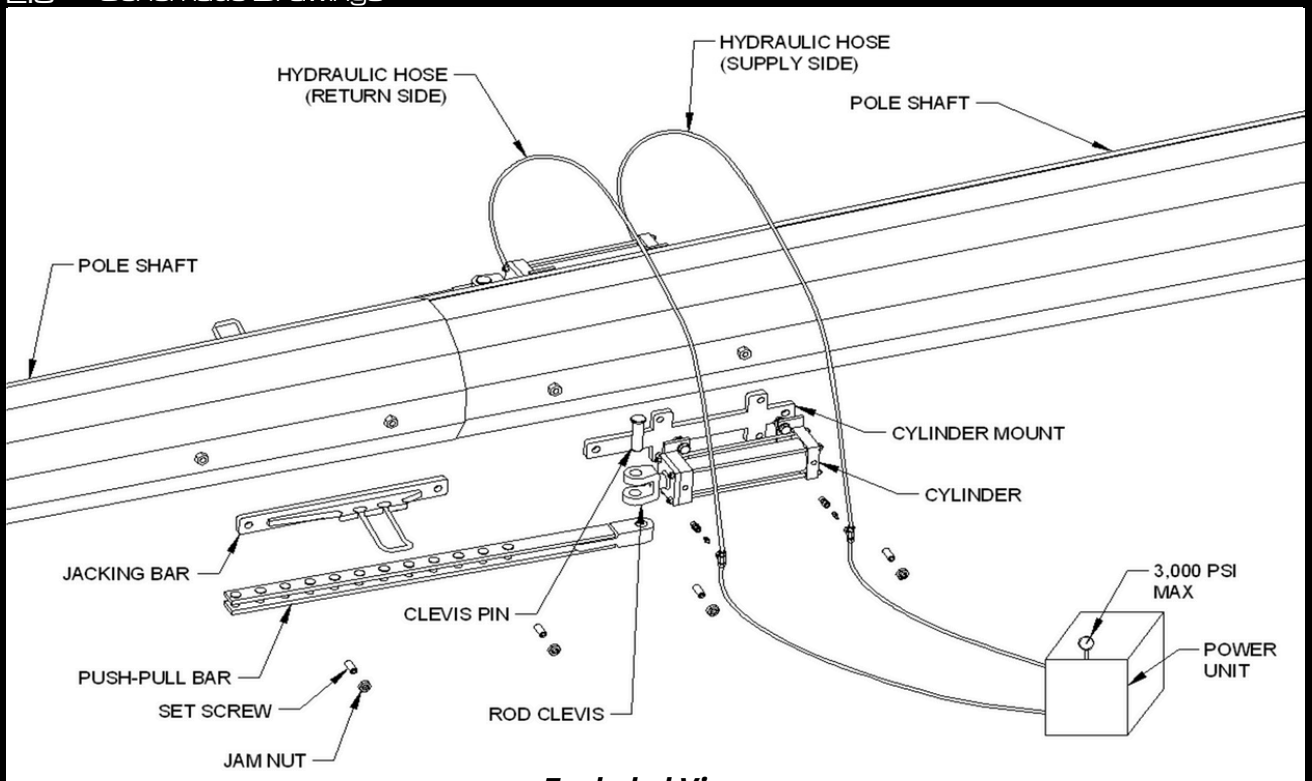

Exploded View

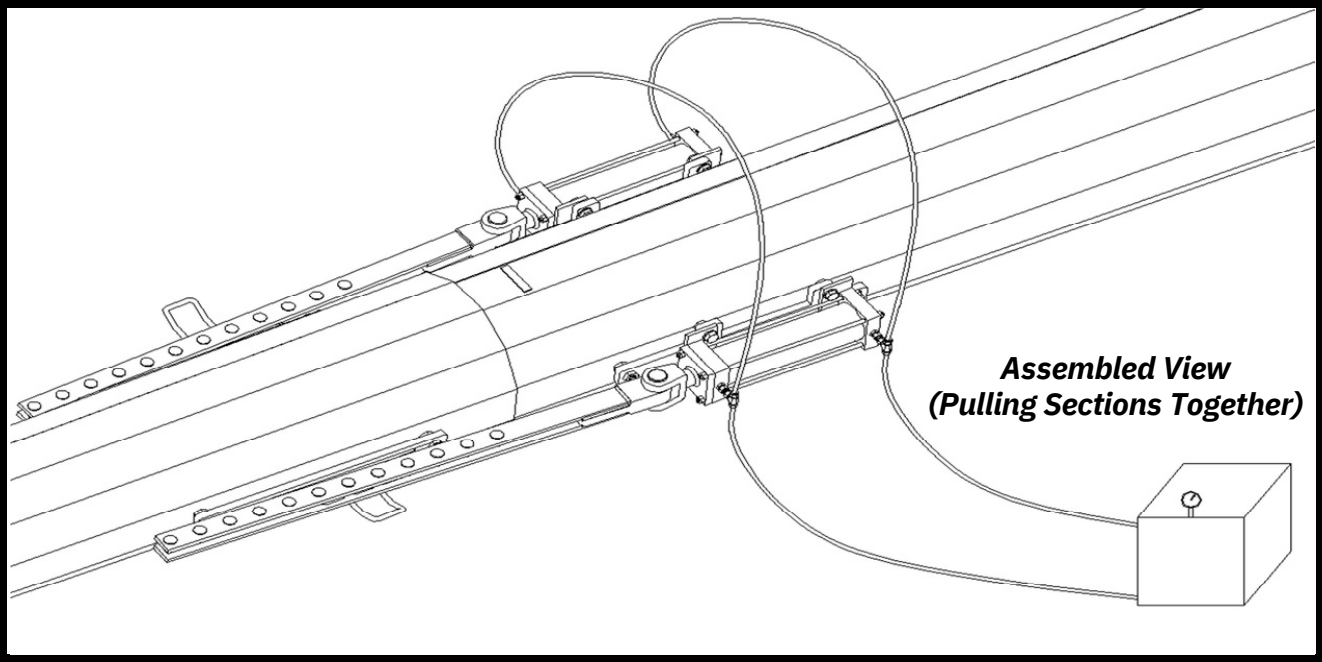

WARNING: *DO NOT exceed the maximum tandem* ***pulling*** *cylinder force* ***(See Ambor drawings)****. DO NOT exceed maximum operating pressure (3,000 psi).* ***(See Paragraph 3.0 Jacking Device Force Calculation Table)***

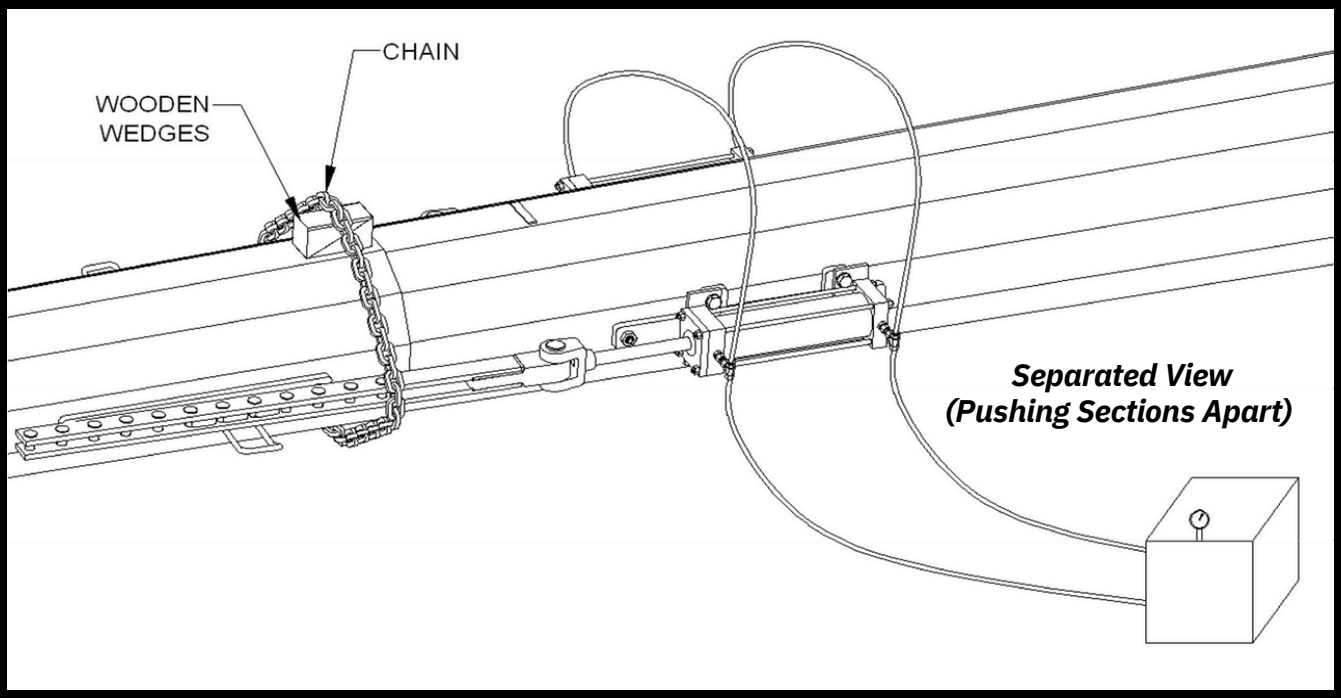

WARNING*: Chain* *Push-Pull Bars while separating pole sections to avoid damage to cylinder rod. DO NOT exceed the maximum tandem* ***pushing*** *cylinder force* ***(See Ambor drawings)****. DO NOT exceed maximum operating pressure (3,000 psi).* ***(See Paragraph 3.0 Jacking Device Force Calculation Table)***

3.0 Jacking Device Force Calculation Table

The equation used to calculate the jacking device force is ***Force(lbf) = Area(in²) x Pressure(psi).***

Each 5 inch bore cylinder has an effective working area of 16.5 square inches for **pulling** and 19.64 square inches when **pushing**. Since the jacking device is comprised of (2) cylinders, the effective area is multiplied by two to account for (2) cylinders (33.0 square inches for **pulling** and 39.3 square inches when **pushing**).

Assembling (Pulling) Force Calculation for Tandem Cylinders Example:
*Force(lbf) = Area(in²) x Pressure(psi); Tandem **Pulling** Area = 33.0 in²*
90,000 lbf = 33.00 in² x 2,727 psi

Disassembling (Pushing) Force Calculation for Tandem Cylinders Example:
*Force(lbf) = Area(in²) x Pressure(psi); Tandem **Pushing** Area = 39.3 in²*
90,000 lbf = 39.3 in² x 2,290 psi

NOTE: *The Hydraulic Power Unit is preset to a maximum operating pressure of 3000 psi.*

Tandem Cylinder Force (Lbf)	Tandem Cylinder Joining Pressure Pulling (psi)	Tandem Cylinder Separation Pressure Pushing (psi)
5,000	152	127
10,000	303	255
15,000	455	382
20,000	606	509
25,000	758	636
30,000	909	764
35,000	1,061	891
40,000	1,212	1,018
45,000	1,364	1,146
50,000	1,515	1,273
55,000	1,667	1,400
60,000	1,818	1,527
65,000	1,970	1,655
70,000	2,121	1,782
75,000	2,273	1,909
80,000	2,424	2,037
85,000	2,576	2,164
90,000	**2,727**	**2,291**

4.0 Installation Instructions

1. Install the set screws into the jacking nuts that are welded to the pole shaft sections. The set screws are to be fully tightened (bottomed out) in the jacking nuts. Upon bottoming, the set screws are to be backed out ¼ turn.

   A. The set screws are designed to be installed with a hex head allen wrench.

   B. If the set screws will not install freely into the jacking nuts, it may be necessary to clean the threads of the jacking nuts with the Bottoming Tap.

2. Slide the Cylinder Mounts and the Jacking Bars over the set screws and secure with 1-inch jam nuts.

   CAUTION: ***If sections are to be jacked together in the vertical position, the Cylinder Mounts are to be attached to the upper section of the joint to eliminate the danger of the Push Pull Bar swinging down when not engaged in the Jacking Bar.***

3. Attach the Hydraulic Hoses to the cylinders via the hydraulic quick couplers. Ensure all connections are free of dirt, grit, and/or any foreign contaminants. The oil supply hose assembly is to be connected to the base end of each cylinder (supply side). The oil return hose is to be connected to the clevis end of the cylinder (return side). All hydraulic connections must be fully inserted to allow oil flow.

   CAUTION: Check the hydraulic reservoir oil level prior to use. ***Some states do not allow the shipment of the jacking device with the hydraulic oil. In the event, the jacking device is shipped without hydraulic oil, an industrial grade hydraulic oil equivalent to ISO 32 should be used. The Hydraulic Power Unit hydraulic reservoir has a 5 gallon capacity.***

4. Start the Hydraulic Power Unit and extend the cylinder rams to maximum length.

   CAUTION: ***Check Hydraulic Power Unit motor oil and gas prior to starting.***

5. Attach the Push-Pull Bars to the Cylinder Mount by inserting the Clevis Pin.

6. Attach the Push-Pull Bar to the Jacking Bar by inserting the Push-Pull Bar pins over the Jacking Bar notches. Ensure both Push-Pull Bars are the same length by hooking in the same notch on the Jacking Bar.

7. When separating sections (pushing apart), the following applies:

   A. Chain the Push-Pull Bars **(See Illustration 2.0 Schematic Drawings – Separated View)**

   B. Insert cushioning wood blocks between the chain and the pole section. Wood block wedges remove chain slack while providing cushioning between the chain and the pole, and also help protect the pole's surface finish. Secure chain around Push-Pull Bars with chain binder.

5.0 Operating Instructions

1. Inspect the LOWER and UPPER sections of the joint to ensure the surface is smooth and free of obstructions.

2. Measure Joints and mark as indicated:

   A. From the Ambor pole drawings, determine the **minimum** joint distance. From the Ambor pole drawings and the ID tag on the LOWER section, determine the **maximum** length of the joint.
   B. Measure the **minimum** joint distance on the top portion of the lower section being assembled. Mark the **minimum** joint distance specified on the **top** of the LOWER section of the two sections being assembled.

3. Lubricate the joint area on the outside of the LOWER section and the inside of the UPPER section. Soapy water is a recommended lubricant.

   CAUTION: ***Care should be taken not to use a lubricant that will later leak from the joint and stain the pole.***

4. When assembling sections (pulling together), the following applies:

   A. Maintain pressure in a slow steady pull until all movement has stopped. The Pressure gauge will not register the maximum pressure achieved until movement in the joint has slowed or stopped.

      WARNING: *DO NOT exceed the maximum tandem* ***pulling*** *cylinder force* ***(See Ambor drawings)****.*

      DO NOT exceed maximum operating pressure (3,000 psi). ***(See Paragraph 3.0 Jacking Device Force Calculation Table)***

   B. To assist assembly ease, either oscillate the advancing UPPER section with a supporting crane or forklift, or strike the pole in the joint area with a hammer. If striking the pole, ensure a cushioning block of wood is used between the pole and the hammer to protect the pole's surface finish.
   C. Ensure that the cylinders do not completely retract when applying pressure. It may be necessary to back off the pressure and unhook the connecting links to extend the cylinder rams for additional travel.

5. Verify a tight, sound slip joint has been achieved by the following:

   A. The force used during assembly is at least the minimum, but not greater than the maximum specified on the Ambor drawings.
   B. Any additional force applied to the joint does not result in additional movement of the joint.
   C. The overlap length achieved is at least the minimum and not more than the maximum specified on the Ambor drawings
   D. The joint shows no more than small gaps which can be caused by slight mismatch in the shapes of the mating sections.

6. After a tight, sound slip joint has been achieved, remove the jacking device by doing the following:

   A. Extend the jacking device cylinder rams enough to unhook the Push-Pull Bars from the Jacking Bars.
   B. Remove the Clevis Pins from the Cylinder Mount and remove the Push-Pull Bars. Fully retract the cylinder rams.

C. Shut off the hydraulic power unit and switch the valve in both directions to be sure system pressure is relieved. Remove the hydraulic hoses.
D. Remove the jam nuts and set screws securing the Cylinder Mounts and the Jacking Bars to the pole sections. Remove the Cylinder Mounts and the Jacking Bars from the pole sections.

7. When separating sections (pushing apart), the following applies:

A. Chain the Push-Pull Bars **(See Illustration 2.0 Schematic Drawings – Separated View)**
B. Insert cushioning wood blocks between the chain and the pole section. Wood block wedges remove chain slack while providing cushioning between the chain and the pole, and also help protect the pole's surface finish. Secure chain around Push-Pull Bars with chain binder.
C. Operate Cylinders in the opposite direction from assembling pole sections. Maintain pressure in a slow steady push until all movement has stopped. The Pressure gauge will not register the maximum pressure achieved until movement in the joint has slowed or stopped.

WARNING*: Chain* *Push-Pull Bars while separating pole sections to avoid damage to cylinder rod. DO NOT exceed the maximum tandem* ***pushing*** *cylinder force* ***(See Ambor drawings)****. DO NOT exceed maximum operating pressure (3,000 psi).* ***(See Paragraph 3.0 Jacking Device Force Calculation Table)***

D. To assist assembly ease, either oscillate the retreating UPPER section with a supporting crane or forklift, or strike the pole in the joint area with a hammer. If striking the pole, ensure a cushioning block of wood is used between the pole and the hammer to protect the pole's surface finish.